Outsourcing Photovoltaic Panel Construction Contract

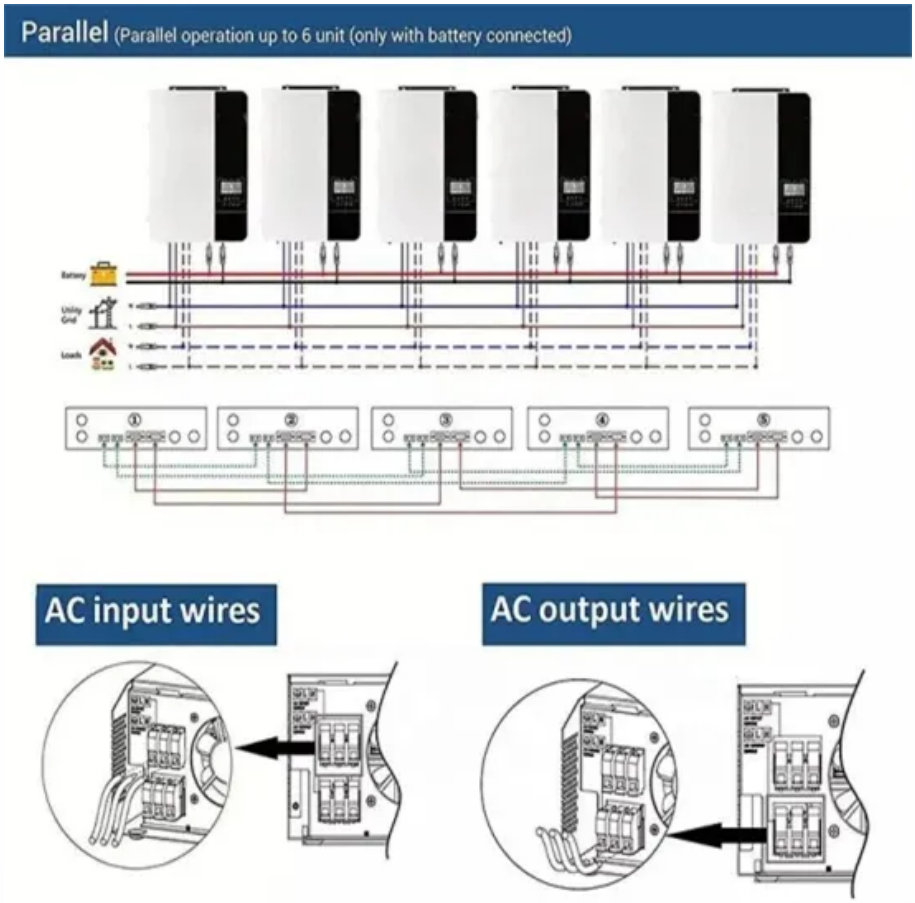

Overview

Uzma excels as an Engineering, Procurement, and Construction (EPC) contractor for Solar Photovoltaic (PV) services, providing end-to-end solutions for solar energy projects. We offer you a fully comprehensive service package for your solar PV construction project, with technical support during the construction phase, to ensure the quality of execution and conformity with the planning documents. What are the three phases of an EPC contract?

An. Sophisticated, reliable, and professional — we provide businesses and industrial facilities with comprehensive solar development services, from engineering and concept design to post-installation maintenance and performance monitoring. We not only reduce risk and complexity with timely project.

Outsourcing Photovoltaic Panel Construction Contract

Outsourcing Solutions For Renewable Energy Companies

Empower your renewable energy business with expert outsourcing. Discover how the right BPO solutions can drive growth, savings, and efficiency.

Photovoltaic panel installation project construction contract

The solar panel installation process is relatively simple, but with custom solutions necessary for every home and plenty of electrical jargon to decipher, it can be

Engineering, Procurement and Construction ("EPC") Contractor for ...

Uzma excels as an Engineering, Procurement, and Construction (EPC) contractor for Solar Photovoltaic (PV) services, providing end-to-end solutions for solar energy projects.

EPC contracts in the solar sector

A construction contract: An EPC Contract is one contractual approach that can be taken to construct a solar facility. Another option is a disaggregated approach with, for example, a supply contract, a ...

Outsourcing Photovoltaic Panel Construction Contract

ESFC Investment Group offers financing and construction of solar power plants, from project development and feasibility studies to installation, optimization and maintenance - EPC contracts

Engineering, Procurement and Construction (EPC Solar)

Our solar EPC procurement phase includes experienced project teams to manage the entire process seamlessly, from supplier evaluation and solicitation to equipment manufacturing, delivery and ...

Understanding Solar EPC: The Complete Guide to Engineering, ...

Solar EPC encompasses three distinct but interconnected stages: Engineering, Procurement, and Construction. Here's a closer look at each component: The engineering phase is ...

Solar EPC Explained: Engineering, Procurement & Construction in ...

Confused about Solar EPC? This guide breaks down Engineering, Procurement & Construction, explaining how EPC works, its pros & cons, and why it's a smart choice for solar projects.

Construction Management for PV & Solar , PV-Specialist

Our experienced team can provide you with guidance on selecting the best components, designing an optimal layout, and managing the construction process to ensure a successful project. With our ...

Contact Us

For catalog requests, pricing, or partnerships, please visit: https://motocykle3city.pl