Lithium acid iron phosphate solar outdoor power cabinet

Lithium acid iron phosphate solar outdoor power cabinet

20KW integrated hybrid lithium iron phosphate photovoltaic ...

The 20kW Integrated Hybrid Lithium Iron Phosphate Photovoltaic Energy Storage System is a state-of-the-art solution designed for small to medium-sized rooftop outdoor balconies. This innovative ...

BESS (Battery Energy Storage Systems)

261kWh Outdoor LFP (Lithium Iron Phosphate) Liquid-Cooled Energy S Outdoor 55KW/110KW/233KWh liquid-cooled energy storage cabinet BESS liquid cooling system HJ-G150-372L 150KW/372KWh ...

Off-grid solar energy storage system with hybrid lithium iron phosphate

Meanwhile, an eco-friendly lithium iron phosphate battery (LFP battery) ESS replaces part of the lead-acid battery ESS, forming a hybrid ESS, making a better and greener off-grid solar ...

Solar Battery Cabinet Equipment Enclosures for on-grid or off ...

Our solar battery cabinet systems are storing Pylontech lithium-iron phosphate (LiFePO) batteries, in particular the US3000C rack mounted battery modules. We install these in a purpose built cabinet ...

Outdoor Integrated Energy Storage System

Discover NPP's Outdoor Integrated Energy Storage System, a cutting-edge solution that seamlessly combines lithium iron phosphate batteries, advanced Battery Management System (BMS), Power ...

Photovoltaic Energy Storage Cabinet: Why Lithium Iron Phosphate

Photovoltaic Energy Storage Cabinet: Why Lithium Iron Phosphate Batteries Dominate Solar Energy Storage Summary: Discover how lithium iron phosphate (LiFePO4) batteries revolutionize ...

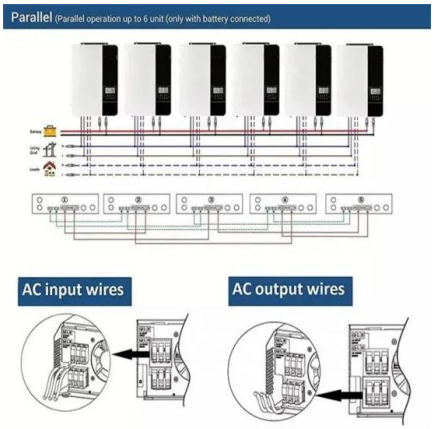

Solar-Powered Lithium Iron Phosphate Outdoor Energy Storage Cabinet

Product Description 6.2KW/28KWH Outdoor Ess Cabinet The energy storage cabinet consists of 2 51.2V 280AH battery packs, and the 51.2V 560AH DC source supplies power to the ...

Sunway Intelligent liquid-cooled 100KW 261KWH Outdoor Cabinet ...

Product Datasheet Download Experience enhanced performance and smart thermal management with the Sunway 100kW/261kWh Liquid-Cooled Energy Storage System. Engineered for high-capacity ...

IP55 ESS Outdoor Cabinet Energy Storage System , AZE

Based on a lithium iron phosphate battery system, the ESS outdoor cabinet serves as a comprehensive complete solution for stationary energy storage. The universal usability, such as in the areas of ...

Outdoor Integrated Energy Storage Cabinet

Outdoor Integrated Energy Storage Cabinet Discover TANFON's Outdoor Integrated Energy Storage Systema cutting-edge solution that seamlessly combines lithiumiron phosphate ...

Contact Us

For catalog requests, pricing, or partnerships, please visit: https://motocykle3city.pl