British energy storage mobile power manufacturer

Overview

British battery manufacturers are spearheading sustainable energy innovation, with companies like Britishvolt, AMTE Power, and Hyperdrive Innovation leading the charge. Here at Multi Source Power our team of experts design, build, and deliver Battery Energy Storage Systems for both on- and off-grid applications. The company's proprietary technology uses liquid air as the storage medium and its custom designed Liquid Air Energy Storage (LAES) solutions can deliver anywhere. Zenobe Energy manufactures battery energy storage systems. It provides comprehensive solutions for the electrification of fleets (buses, trucks and school transportation), including charging infrastructure, battery replacement and fleet management software. The UK energy storage market is expanding quickly, with an estimated size of 10. 74 MW in 2024, set to grow to 28.

British energy storage mobile power manufacturer

[Which British Battery Manufacturers Are Leading the Energy Revolution?]

British battery manufacturers are spearheading sustainable energy innovation, with companies like Britishvolt, AMTE Power, and Hyperdrive Innovation leading the charge.

Home , AceOn Group

AceOn offers a comprehensive range of scalable commercial and industrial BESS solutions, from 100kW and 200kW systems to large-scale 500kW, 1MW, 2.5MW, and 5MW+ installations. Whether you ...

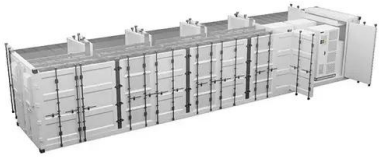

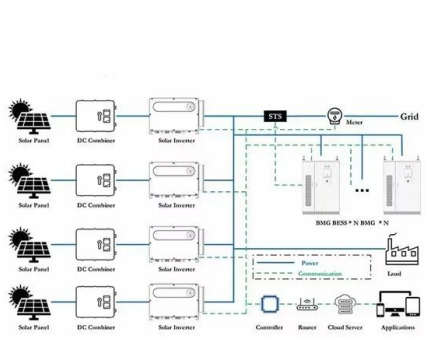

[United Kingdom Energy Storage Systems Company List]

Get access to the business profiles of top 10 United Kingdom Energy Storage Systems companies, providing in-depth details on their company overview, key products and services, financials, recent ...

[Top 11 Energy Storage startups in UK]

Industrial Power Response develops energy storage systems for intensive applications. Its proprietary energy storage technology is designed for electrifying industrial equipment and the ...

Multi Source Power

Here at Multi Source Power our team of experts design, build, and deliver Battery Energy Storage Systems for both on- and off-grid applications. Our high-performance modular BESS fully integrates ...

British energy storage mobile power manufacturer

This article will mainly explore the top 10 energy storage manufacturers in the world including BYD, Tesla, Fluence, LG energy solution, CATL, SAFT, Invinity Energy Systems, Wartsila, NHOA energy, ...

33 Top Energy Storage Companies in United Kingdom

Detailed info and reviews on 33 top Energy Storage companies and startups in United Kingdom in 2026. Get the latest updates on their products, jobs, funding, investors, founders and more.

[BESS suppliers in Great Britain: Who is dominating the market?]

Tesla, BYD, and CATL are the three largest suppliers of battery energy storage systems in Great Britain. Tesla (1,150 MWh) accounts for 90% of the market share from companies based in North America.

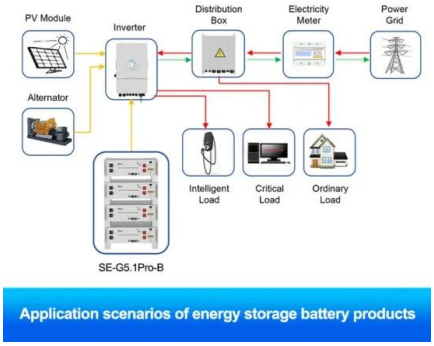

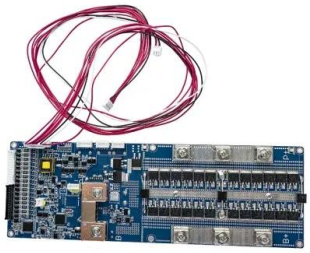

[Top 10 energy storage manufacturers in UK]

This article will explore the top 10 energy storage manufacturers in UK, focusing on their technological advancements and roles in the energy storage movement.

[UK Portable Energy Storage System Market Size and Forecasts 2032]

Key Findings The UK Portable Energy Storage System Market is expanding rapidly due to rising demand for off-grid power backup and mobile energy solutions. Increasing adoption of ...

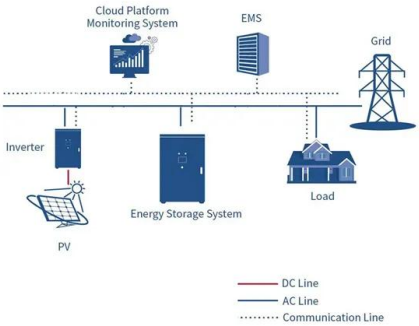

Contact Us

For catalog requests, pricing, or partnerships, please visit: https://motocykle3city.pl